Application of ATW-Expander
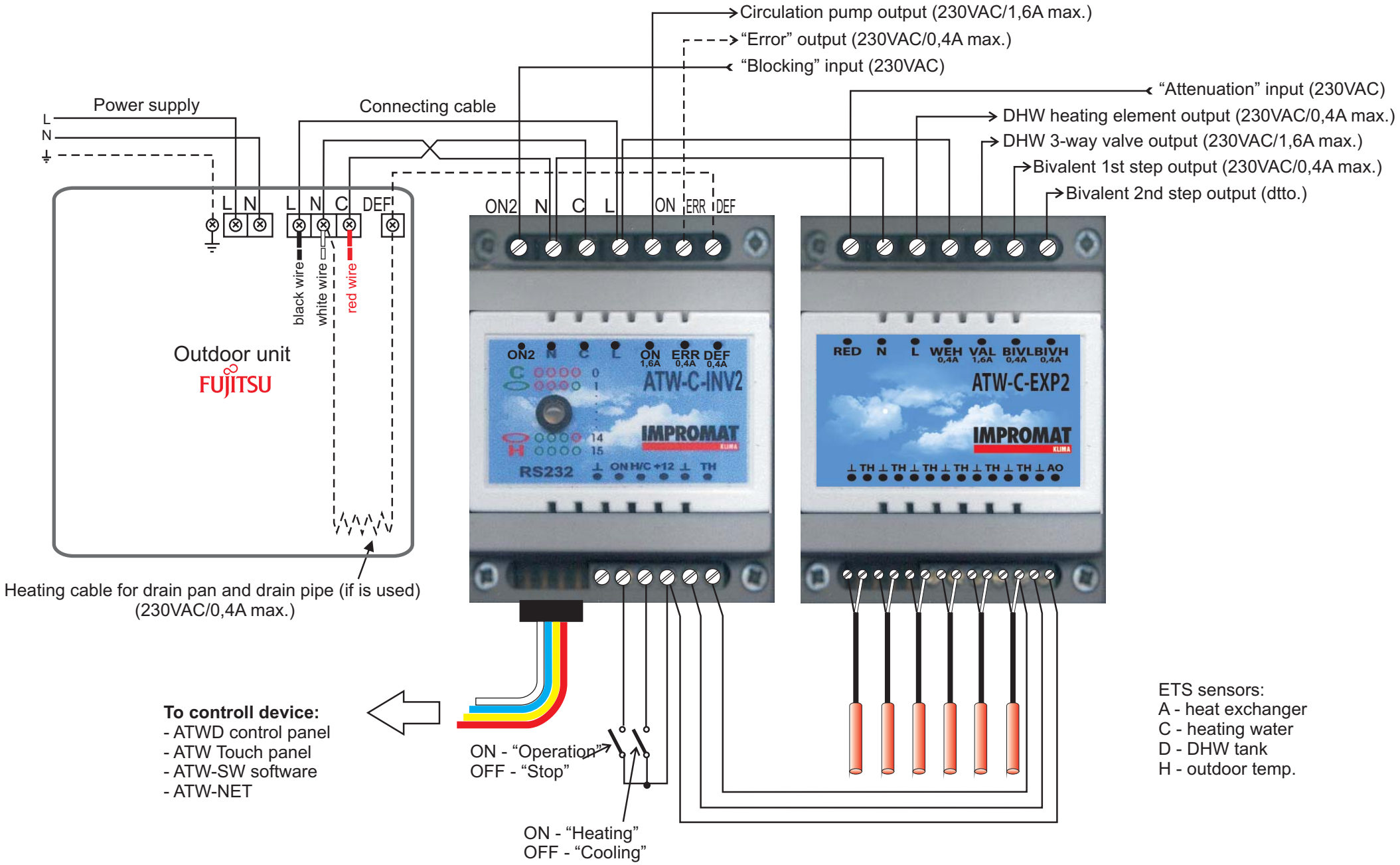
for air-water heat pump